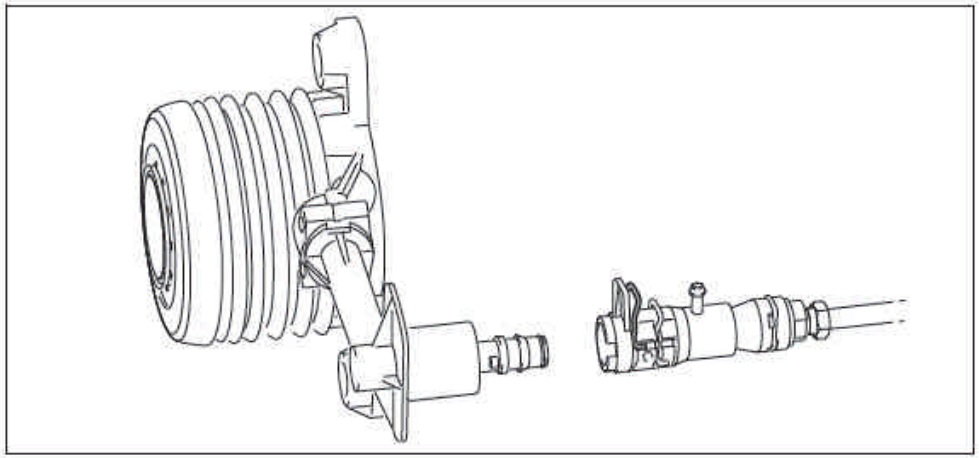

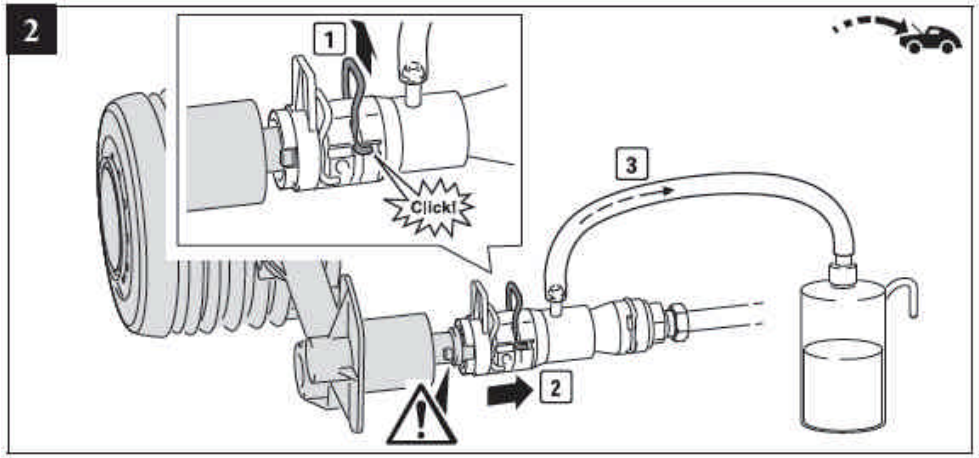

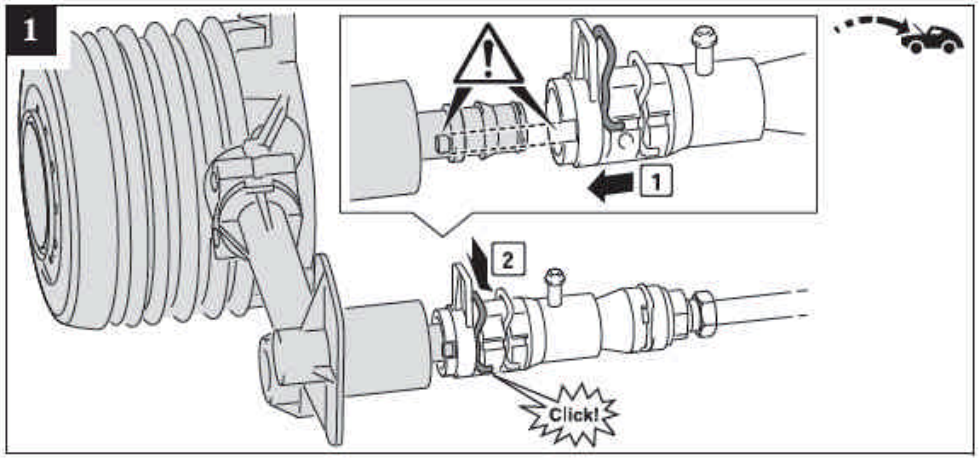

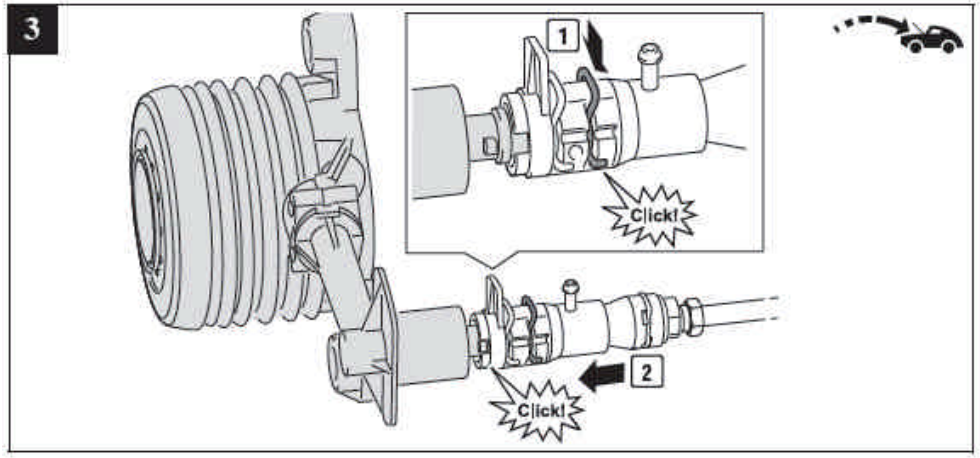

LUK SERVICE LUK