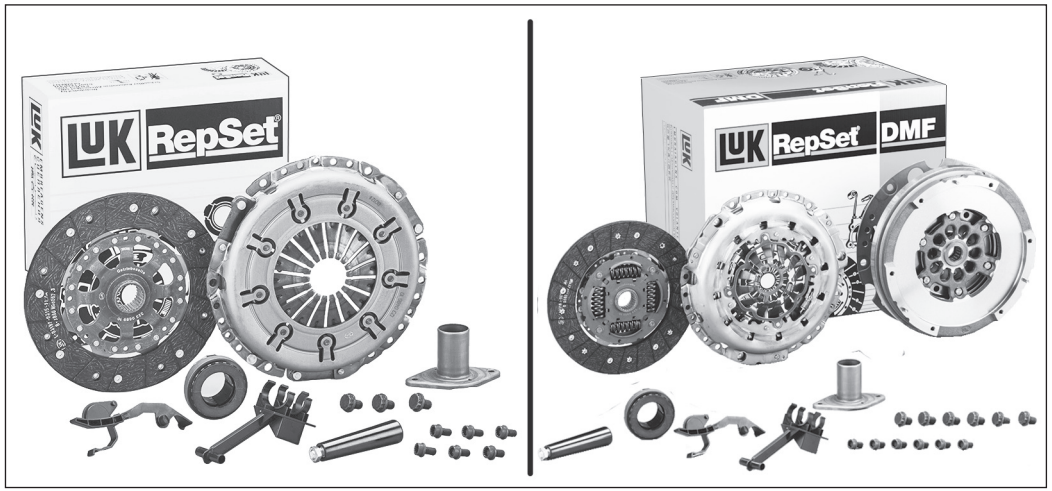

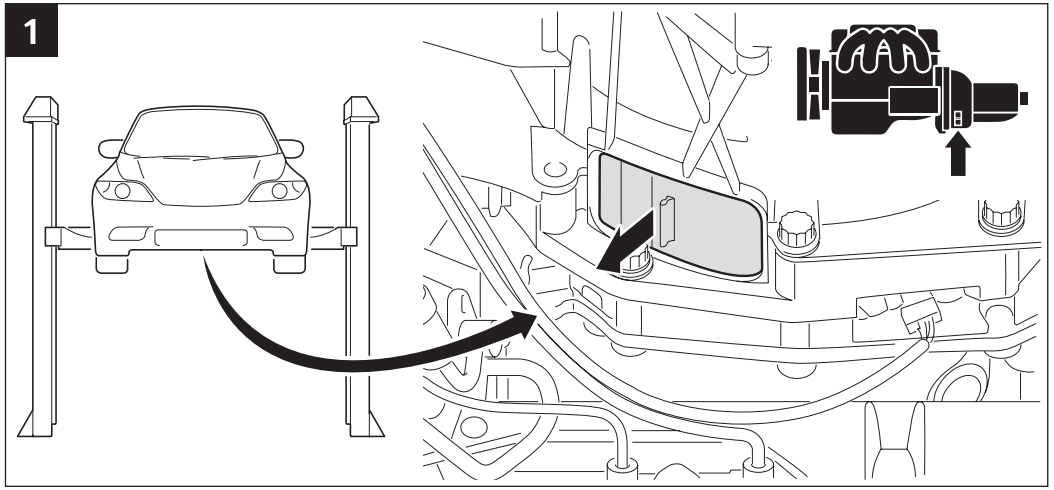

SCHAEFFLER REP>XPERT LUK INA FAG RUVILLE

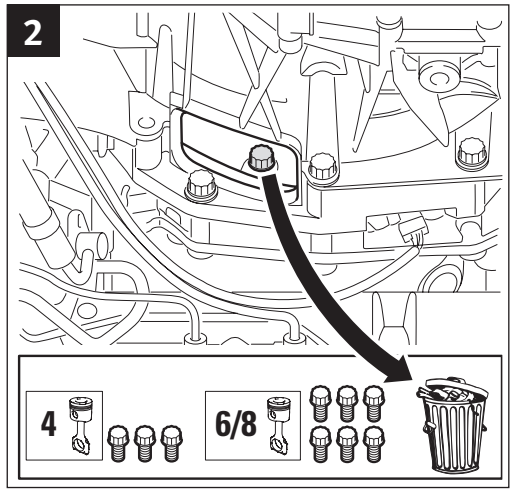

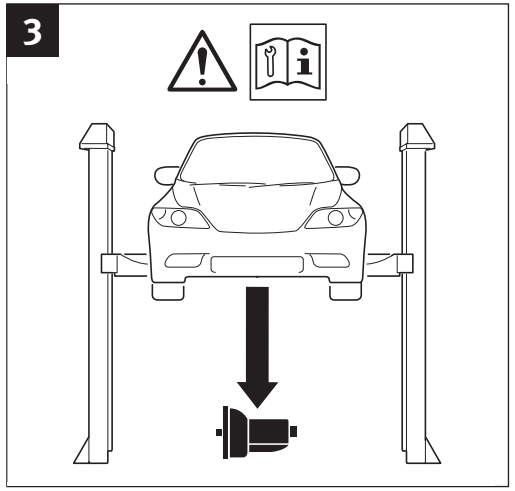

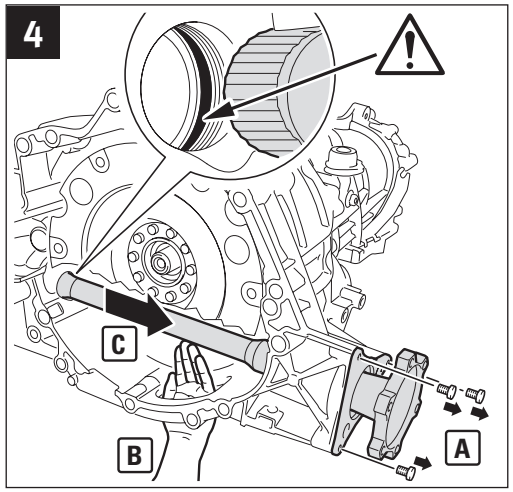

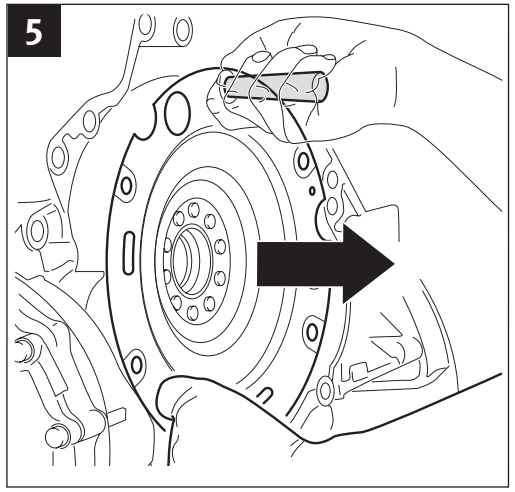

999 6006 320 © 2018 Schaeffler Automotive Aftermarket

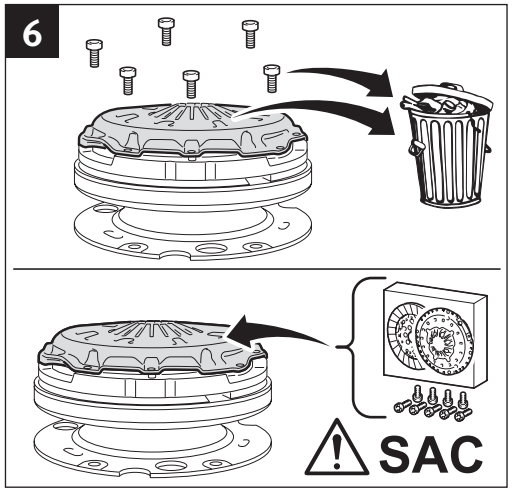

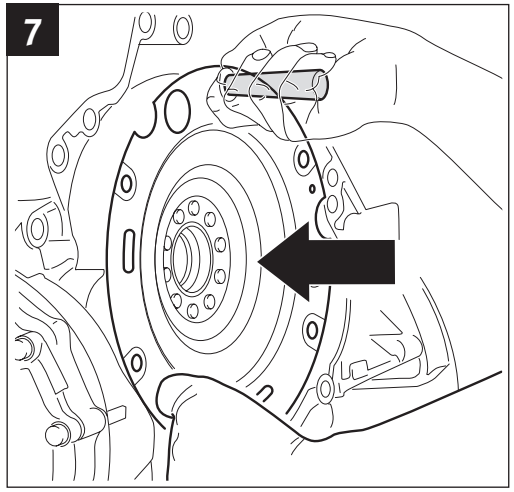

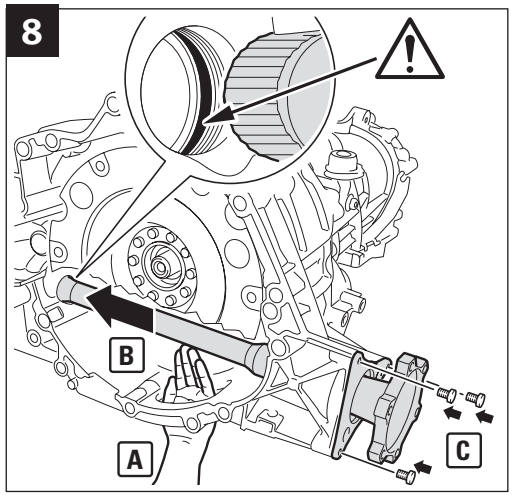

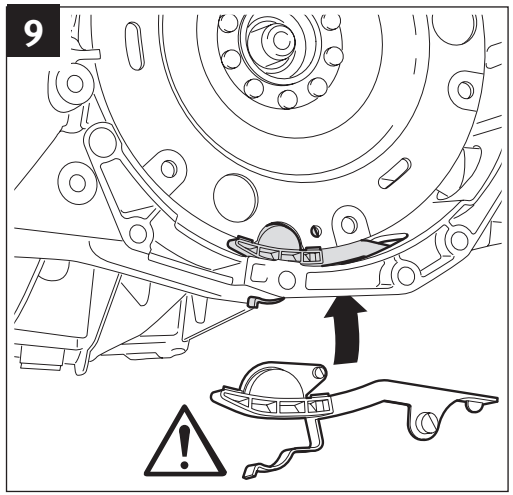
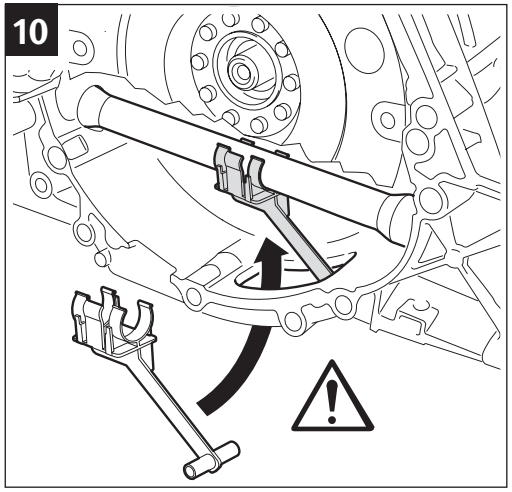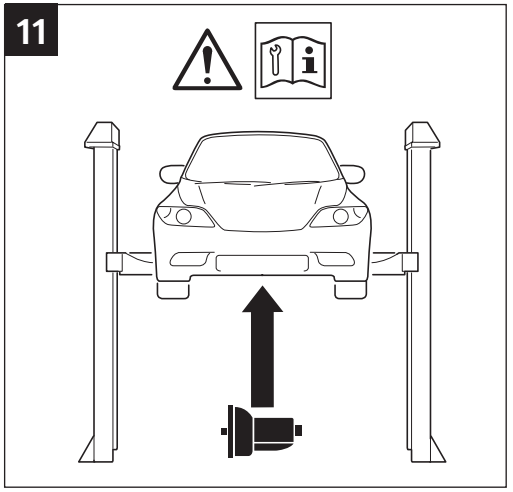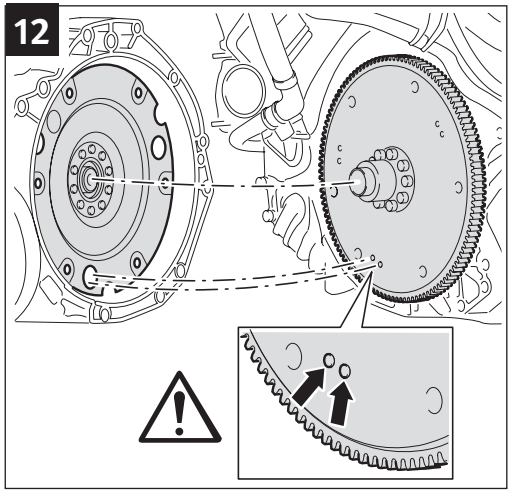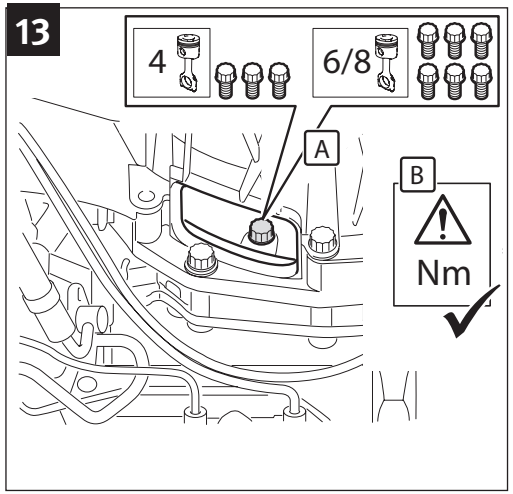
SCHAEFFLER REP XPERT LUK INA FAG RUVILLE