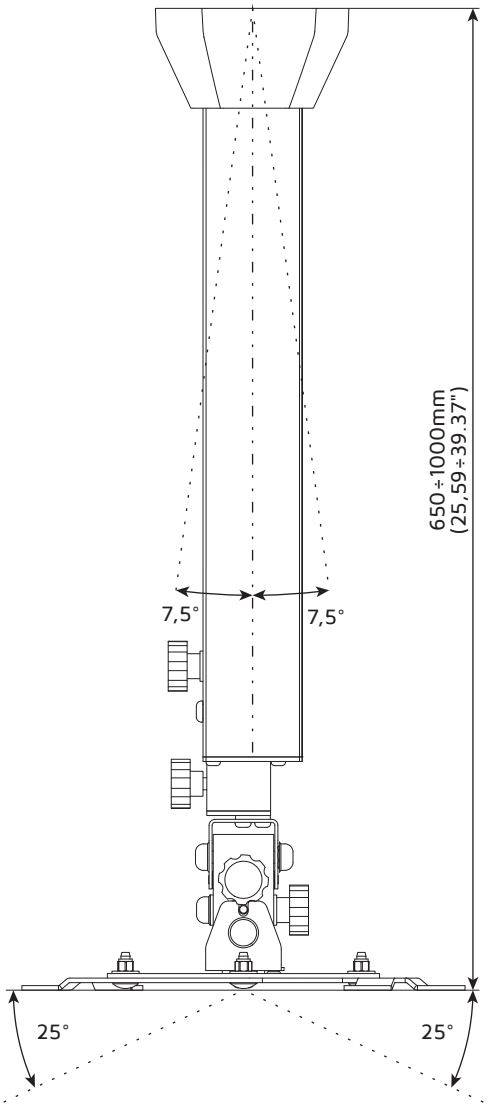
650÷1000mm
(25,59÷39.37")
7,5°
7,5°
25°
25°

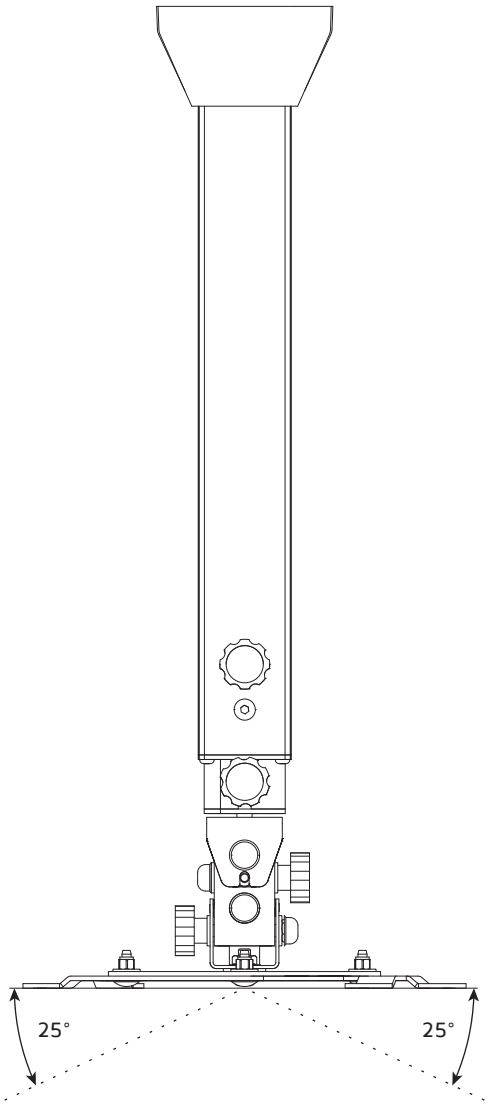
25°
25°

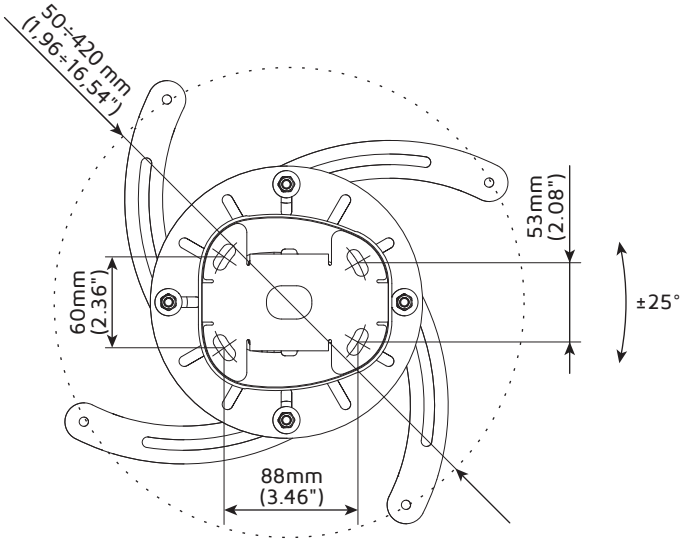
50÷420 mm
(1,96÷16,54")
53mm
(2.08")
±25°
60mm
(2.36")
88mm
(3.46")