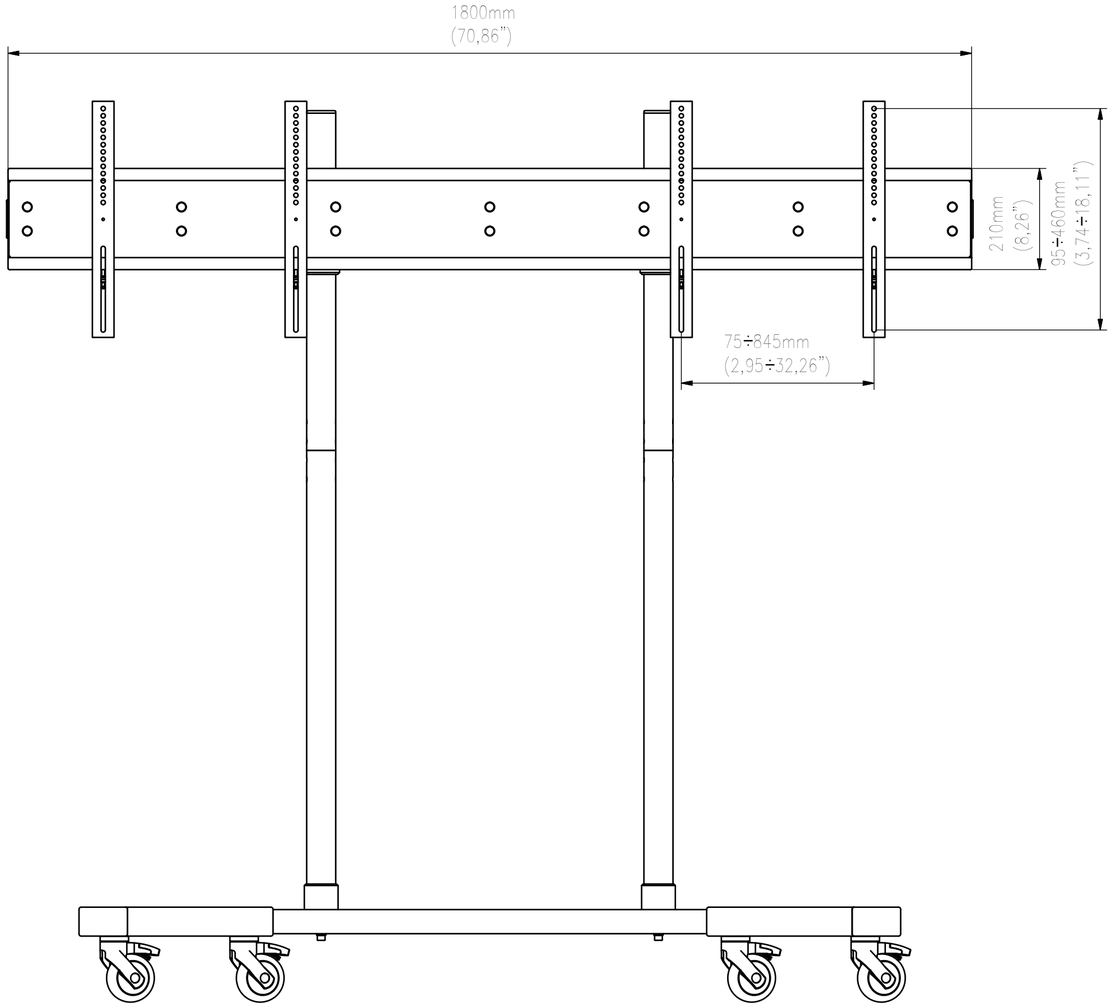
1800mm
(70,86")
210mm
(8,26")
95÷460mm
(3,74÷18,11")
75÷845mm
(2,95÷32,26")

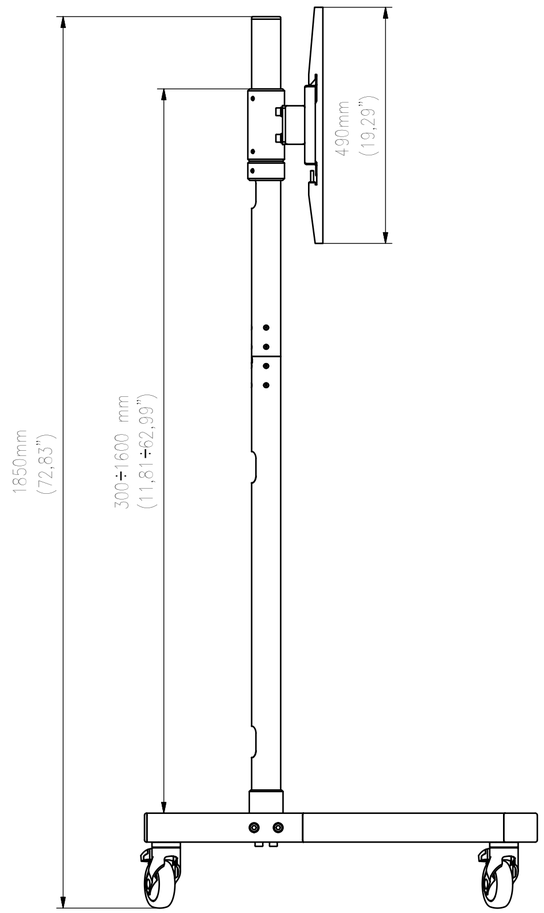
490mm
(19,29")
1850mm
(72,83")
300÷1600 mm
(11,81÷62,99")

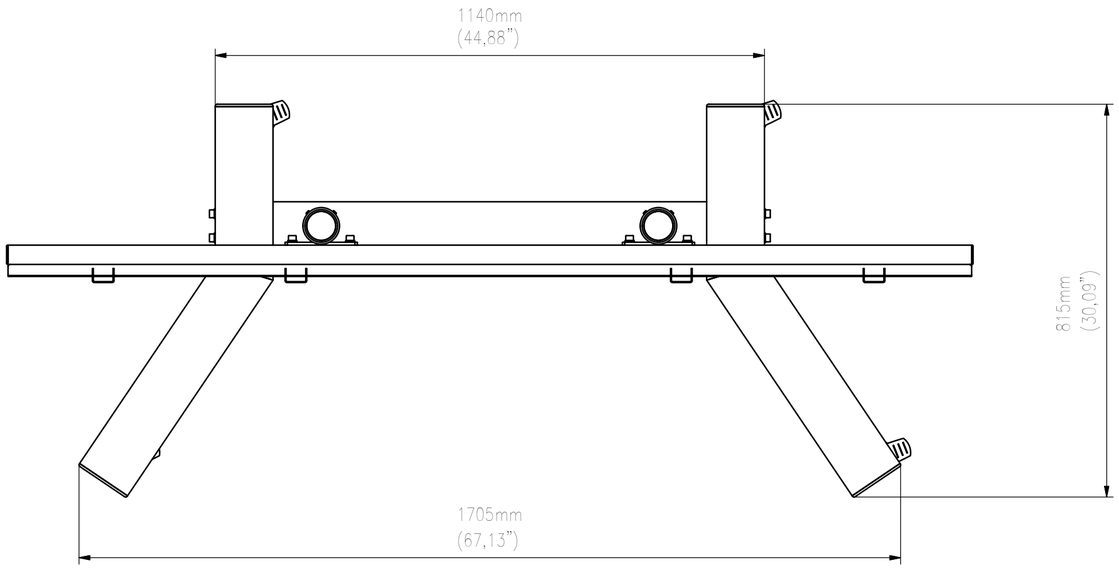
1140mm
(44,88")
815mm
(30,09")
1705mm
(67,13")